STEVAL-ILL057V1

200 W, digital 4 LED-channel evaluation board with STLUX385A-controlled current regulation and dimming

Data brief

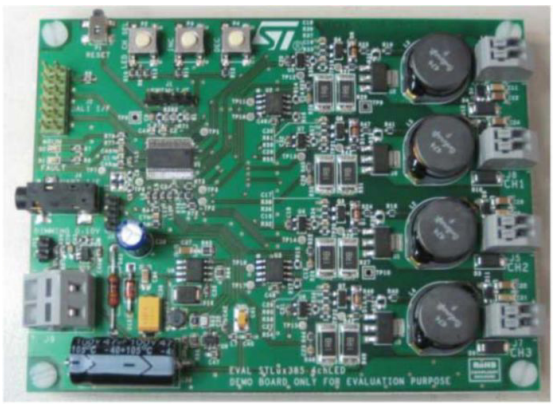

Features

- Based on the STLUX385A digital controller
- Up to 200 W
- 4 LED channels
- Adjustable LED current and dimming
- Adaptive voltage compensation
- Real-time fault detection and protection (e.g: short or open circuit)
- Serial interface
- DALI (optional)
- RoHS compliant

Description

The STEVAL-ILL057V1 product evaluation board is a complete and configurable solution for managing four independent high-brightness LED channels using the STLUX385A digital controller. The STLUX385A is part of STMicroelectronics' Masterlux™ family and embeds advanced peripherals tailored to generate high resolution PWM signals (SMED).

The STEVAL-ILL057V1 implements inversed buck topology to drive each LED channel. The SMED technology integrated in the STLUX385A regulates the LED current, exploiting the fixed off-time (FOT) principle. Each channel can generate output current in the range of 250 mA to 1 A.

The number of LEDs, the current and the PWM dimming point can be set through the command interpreter, accessible via the serial interface. Dimming can also be manually adjusted via the three on-board buttons.

The evaluation board can be optionally controlled via a DALI interface. The DALI connection board is available separately (part number STEVAL-ILM001V1). The STLUX385A DALI software drivers and application firmware are available.

For further information contact your local STMicroelectronics sales office. www.st.com

1 Schematic diagram

Figure 1. STEVAL-ILL057V1 circuit schematic (1 of 3)

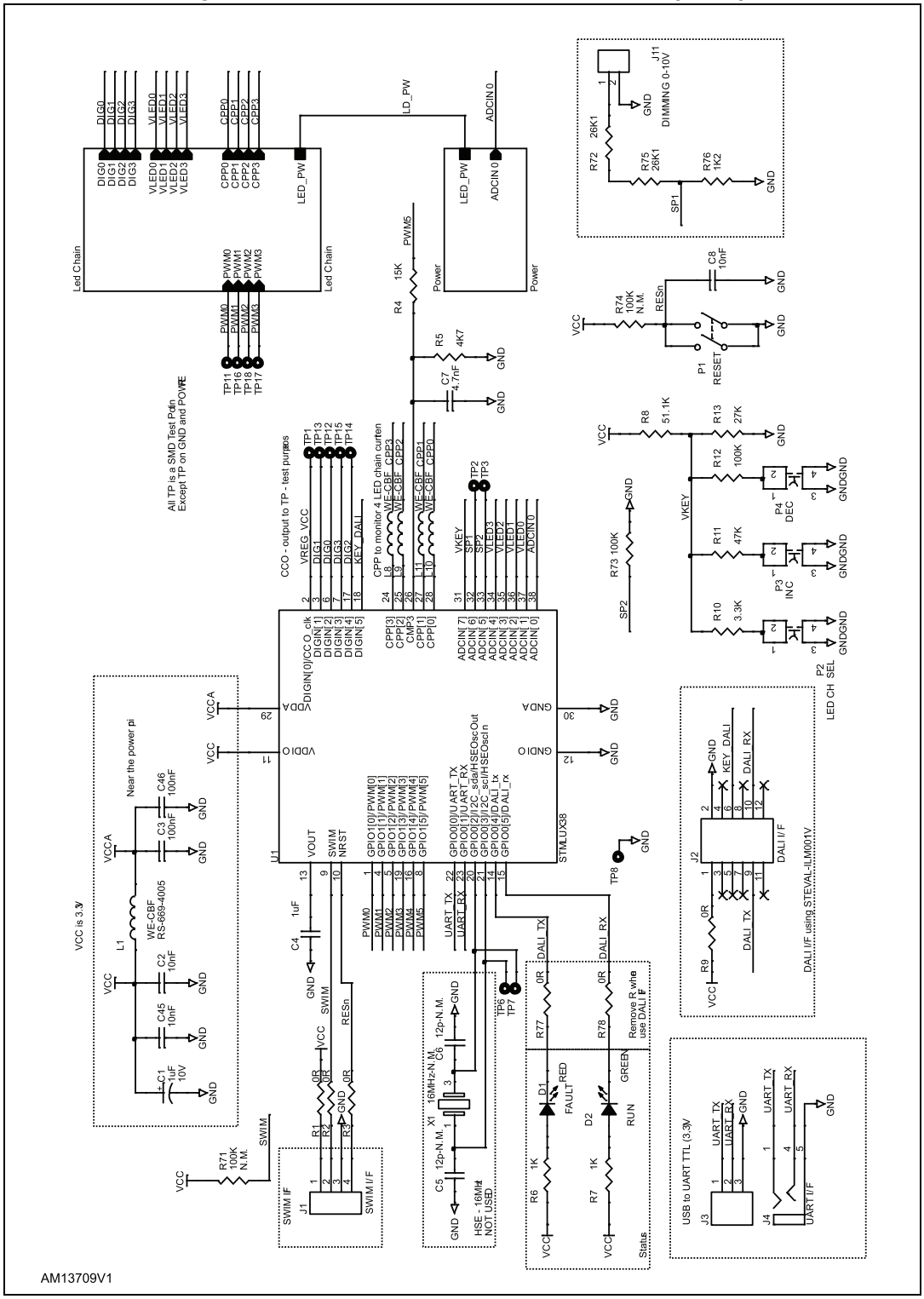

Figure 2. STEVAL-ILL057V1 circuit schematic (2 of 3)

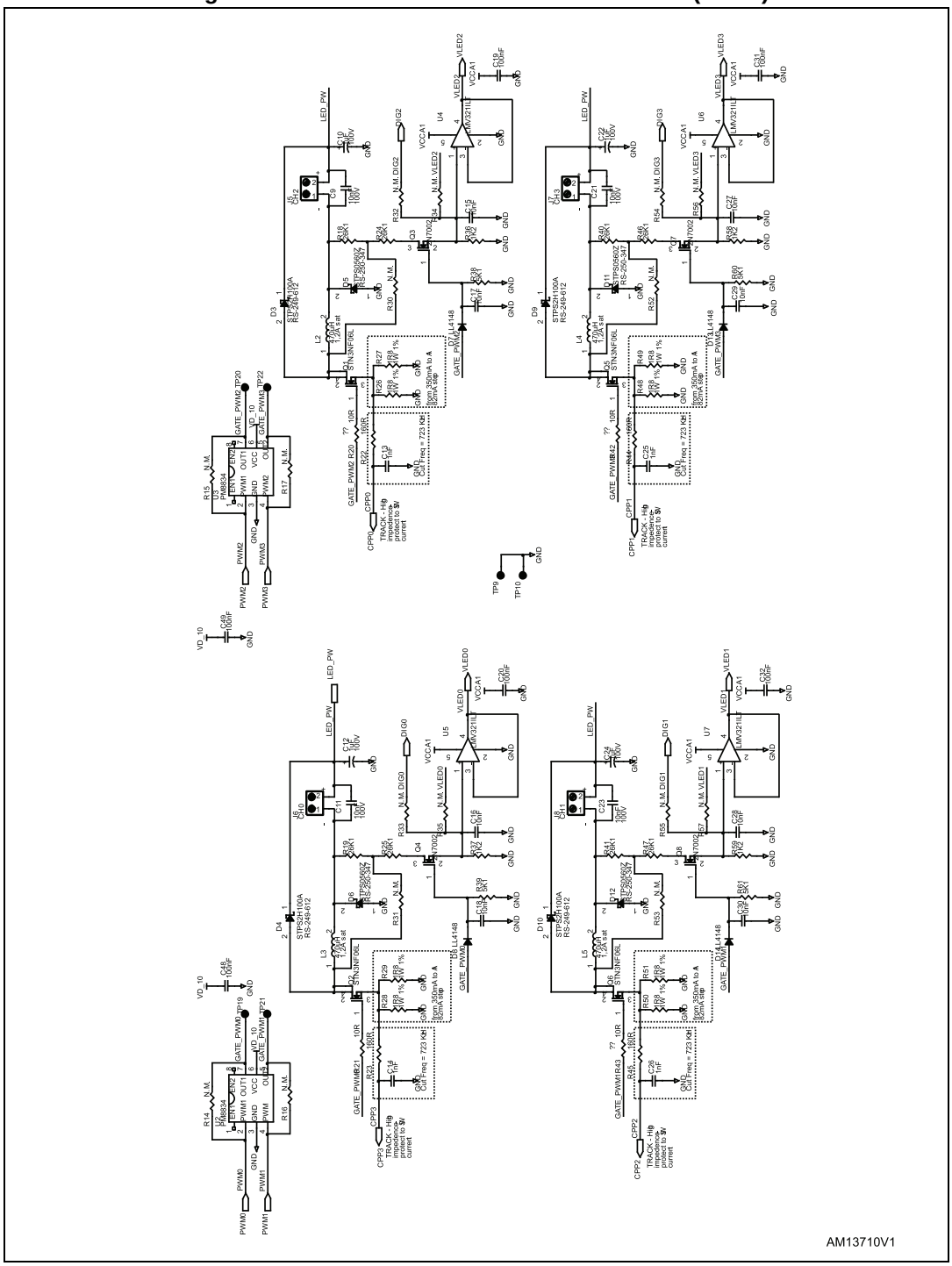

Figure 3. STEVAL-ILL057V1 circuit schematic (3 of 3)

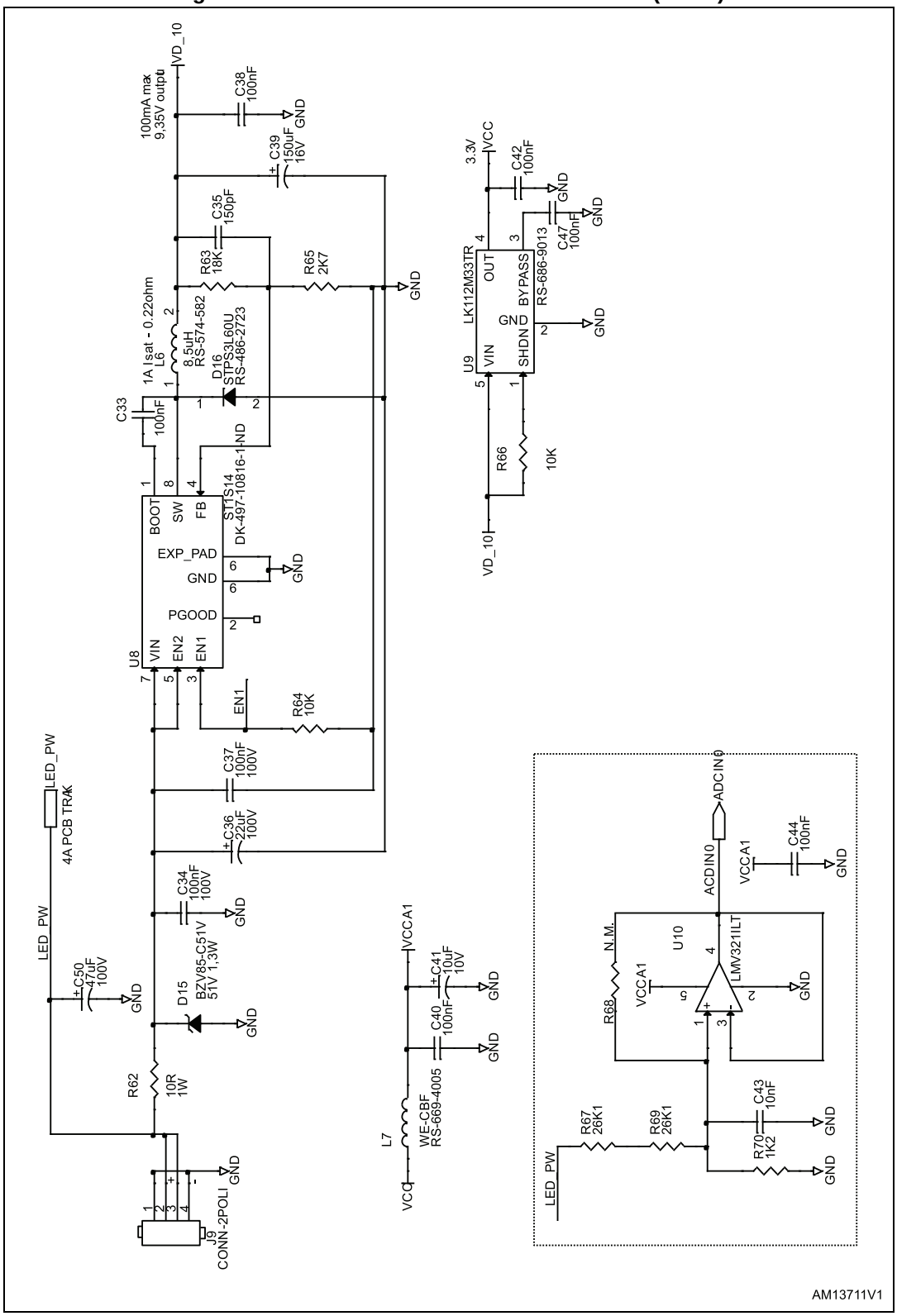

2 Revision history

Table 1. Document revision history

Date	Revision	Changes
15-Jan-2014	1	Initial release.

Please Read Carefully:

Information in this document is provided solely in connection with ST products. STMicroelectronics NV and its subsidiaries (“ST”) reserve the right to make changes, corrections, modifications or improvements, to this document, and the products and services described herein at any time, without notice.

All ST products are sold pursuant to ST’s terms and conditions of sale.

Purchasers are solely responsible for the choice, selection and use of the ST products and services described herein, and ST assumes no liability whatsoever relating to the choice, selection or use of the ST products and services described herein.

No license, express or implied, by estoppel or otherwise, to any intellectual property rights is granted under this document. If any part of this document refers to any third party products or services it shall not be deemed a license grant by ST for the use of such third party products or services, or any intellectual property contained therein or considered as a warranty covering the use in any manner whatsoever of such third party products or services or any intellectual property contained therein.

UNLESS OTHERWISE SET FORTH IN ST’S TERMS AND CONDITIONS OF SALE ST DISCLAIMS ANY EXPRESS OR IMPLIED WARRANTY WITH RESPECT TO THE USE AND/OR SALE OF ST PRODUCTS INCLUDING WITHOUT LIMITATION IMPLIED WARRANTIES OF MERCHANTABILITY, FITNESS FOR A PARTICULAR PURPOSE (AND THEIR EQUIVALENTS UNDER THE LAWS OF ANY JURISDICTION), OR INFRINGEMENT OF ANY PATENT, COPYRIGHT OR OTHER INTELLECTUAL PROPERTY RIGHT.

ST PRODUCTS ARE NOT DESIGNED OR AUTHORIZED FOR USE IN: (A) SAFETY CRITICAL APPLICATIONS SUCH AS LIFE SUPPORTING, ACTIVE IMPLANTED DEVICES OR SYSTEMS WITH PRODUCT FUNCTIONAL SAFETY REQUIREMENTS; (B) AERONAUTIC APPLICATIONS; (C) AUTOMOTIVE APPLICATIONS OR ENVIRONMENTS, AND/OR (D) AEROSPACE APPLICATIONS OR ENVIRONMENTS. WHERE ST PRODUCTS ARE NOT DESIGNED FOR SUCH USE, THE PURCHASER SHALL USE PRODUCTS AT PURCHASER’S SOLE RISK, EVEN IF ST HAS BEEN INFORMED IN WRITING OF SUCH USAGE, UNLESS A PRODUCT IS EXPRESSLY DESIGNATED BY ST AS BEING INTENDED FOR “AUTOMOTIVE, AUTOMOTIVE SAFETY OR MEDICAL” INDUSTRY DOMAINS ACCORDING TO ST PRODUCT DESIGN SPECIFICATIONS. PRODUCTS FORMALLY ESCC, QML OR JAN QUALIFIED ARE DEEMED SUITABLE FOR USE IN AEROSPACE BY THE CORRESPONDING GOVERNMENTAL AGENCY.

Resale of ST products with provisions different from the statements and/or technical features set forth in this document shall immediately void any warranty granted by ST for the ST product or service described herein and shall not create or extend in any manner whatsoever, any liability of ST.

ST and the ST logo are trademarks or registered trademarks of ST in various countries.
Information in this document supersedes and replaces all information previously supplied.
The ST logo is a registered trademark of STMicroelectronics. All other names are the property of their respective owners.

© 2014 STMicroelectronics - All rights reserved

STMicroelectronics group of companies

Australia - Belgium - Brazil - Canada - China - Czech Republic - Finland - France - Germany - Hong Kong - India - Israel - Italy - Japan - Malaysia - Malta - Morocco - Philippines - Singapore - Spain - Sweden - Switzerland - United Kingdom - United States of America

www.st.com